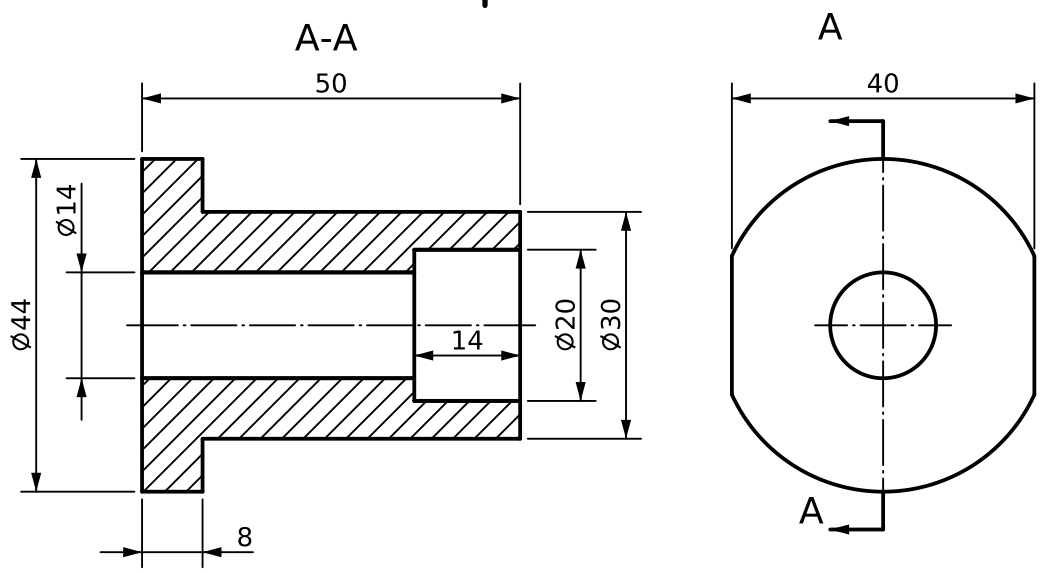

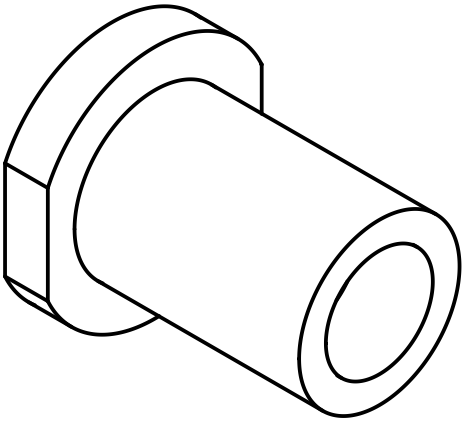

ISOMETRIC VIEW 1:1

NOTES

1. DIMENSIONS IN MILLIMETRES

TITLE	TYPE OF DOCUMENT	DRAWING NO.
Stepped bushing	PART DRAWING	C2D-BUSHING

MATERIAL	LEGAL OWNER	DRAWN BY	APPROVED BY
NOT SPECIFIED			

GENERAL TOLERANCES	DOCUMENT STATUS	DATE
NOT SPECIFIED	IN PREPARATION	2026-10-13

SCALE	SIZE	UNITS	PROJECTION	REV.	SHEET
1:1	A4	mm			1/1